NOTES:
101) CENTERS PERMISSIBLE IF REQUIRED.
102) INSPECTION CERTIFICATION REQUIRED.
103) M20 X 1.0 6G LOCKNUT THREADS
MAJ. DIA - MAX 19.974
MIN 19.794
PITCH DIA - MAX 19.324
MIN 19.206
MIN. DIA - MAX 18.891
MIN 18.590
REFERENCE ONLY
USE ZM20 LOCKNUT AS FUNCTIONAL GUAGE
105) TIR ON DATUM A NOT TO EXCEED THE FOLLOWING AT LOCATIONS CHARTED BELOW (MEASUREMENTS TAKEN FROM THE NON WRENCH FLAT END):

LOCATION (MM)	TIR (MM)
200	0.25
500	0.12
1300	0.12
2100	0.12
2400	0.25

106) BALLSCREW ASSEMBLY SPEC.
BALLNUT:
1) FLANGED BALLNUT PER DIN 69051
2) NOM. PITCH DIA : 25MM
3) LEAD : 20MM
4) VITON END SEALS
5) PRELOAD TO 2% BY BALL SELECTION AXIAL BACKLASH MAX (BEFORE PRE-LOAD) : 0.08
6) LOAD RATINGS:
DYN (C) : 17.5KN
STAT (Co) : 25.0KN
7) MATERIAL : 100Cr6 (SAE 52100) BEARING STEEL OR EQUIV.
BALLSCREW:
1) NOM. PITCH DIA : 25MM
2) LEAD : 20MM
3) LEAD ACCURACY : 50 MICRON/300MM
4) ROLLED FORMER SCREW
5) BALLSCREW DRIVEN APPLICATION
6) MAX SPEED : 12700MM/MIN
7) MATERIAL : CF53 (SAE 1055) STEEL OR EQUIV
8) THREAD SURFACE : 60 HRC (1.5MM CASE DEPTH)
9) RIGHT HAND THREADS

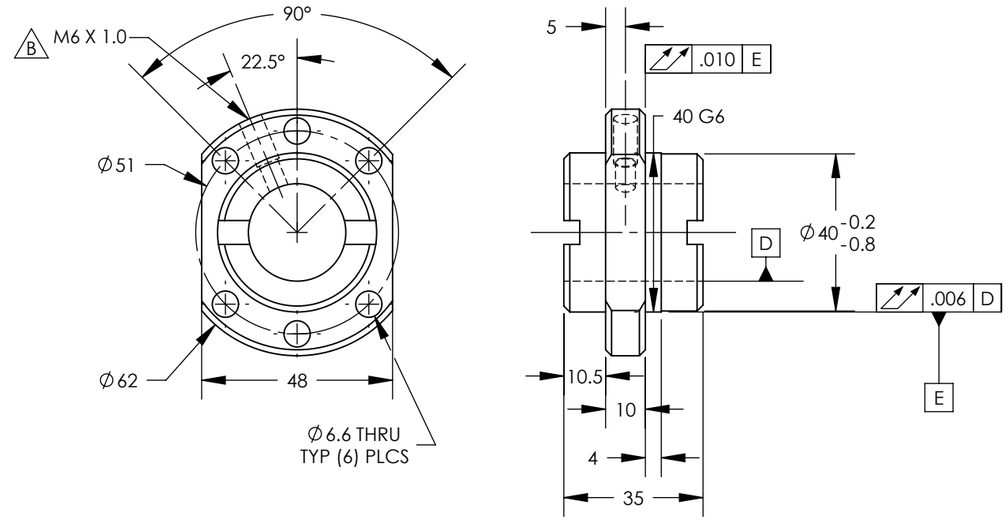

FLANGED BALL NUT DETAIL

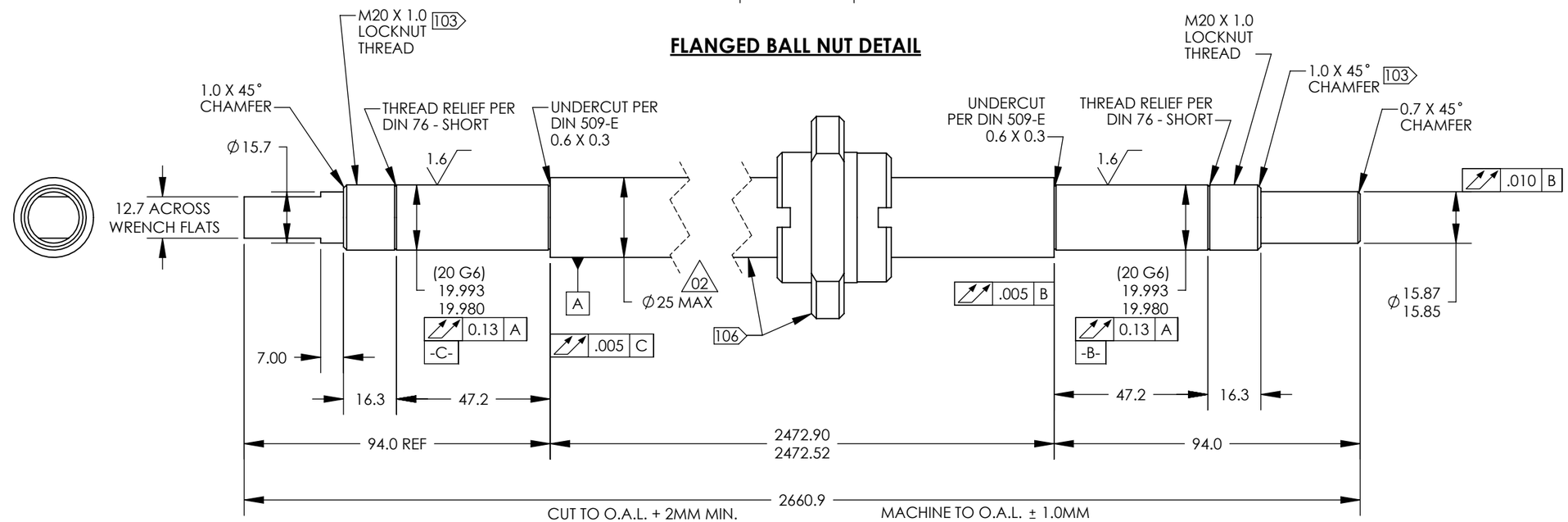

REXPO
CUTTING & BLASTING SOLUTIONS

UNLESS OTHERWISE SPECIFIED:
DIMENSIONS IN DEGREES AND MILLIMETERS
TOLERANCES PER ASME Y14.5M-1994
DIAMETERS ON A COMMON CENTERLINE TO BE TRUE POSITION WITHIN .25
REMOVE BURRS AND BREAK SHARP CORNERS AND FILLET RADII .8 MAX.
ALL MACHINED SURFACES TO 3.2
MILLIMETER X.XX ± 0.12
X.X ± 0.25
X ± 0.80
DEGREE X.X ± .5
X ± 1

THIRD ANGLE PROJECTION	Flow	THIS DRAWING IS THE PROPERTY OF FLOW INTERNATIONAL CORPORATION AND IS NOT TO BE COPIED OR REPRODUCED WITHOUT THE WRITTEN CONSENT OF FLOW INTERNATIONAL CORPORATION.		
	MATERIAL SEE NOTES			
DRAWN BY JMF	STARTED 12/30/2004	ENG J.POPPE	EST WEIGHT KG KG	MODELED IN SOLIDWORKS
TITLE BALLSCREW ASSEMBLY;FLANGE MT;IFB				
REVISION B	SCALE 1:1.5	BASE PART NUMBER 042149		1 OF 1

UNCONTROLLED COPY. USER IS RESPONSIBLE FOR VERIFYING THE CURRENT REVISION LEVEL.